Handgun Disassembly
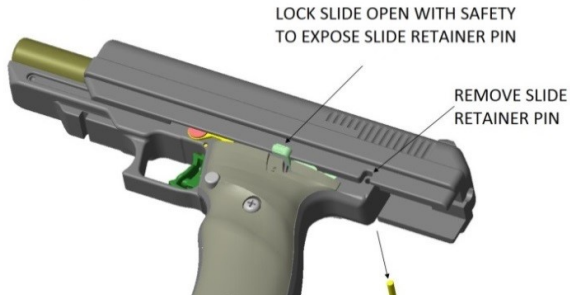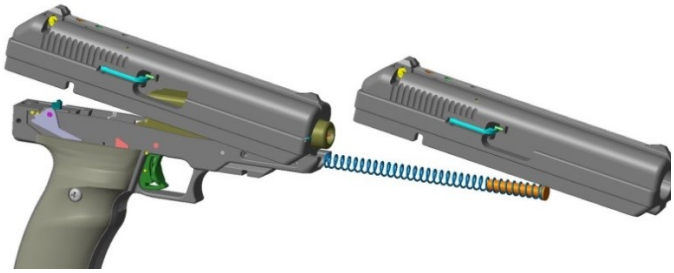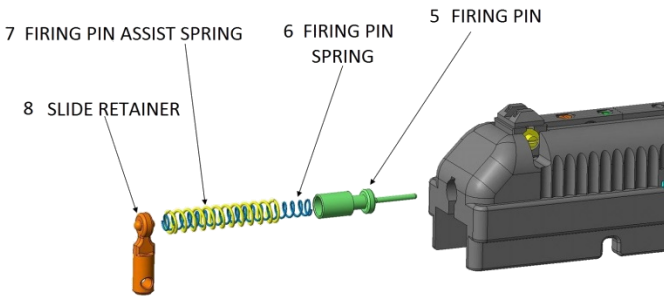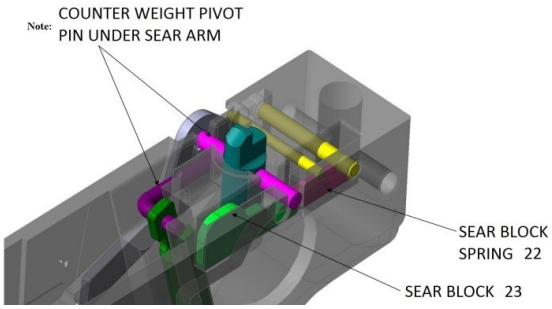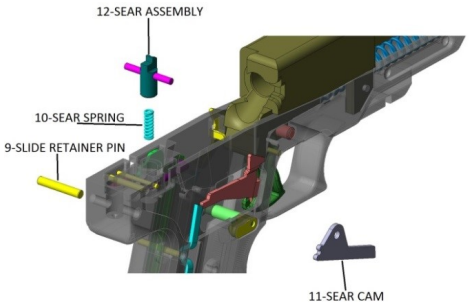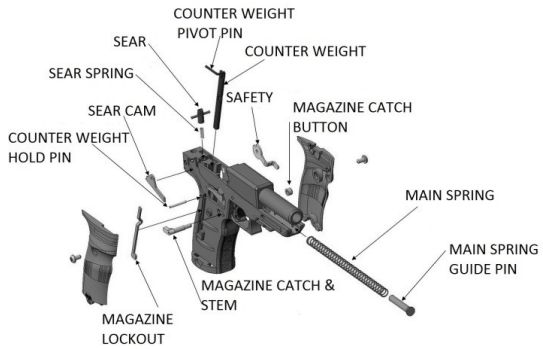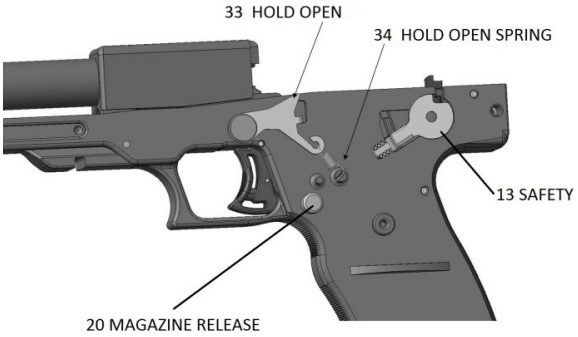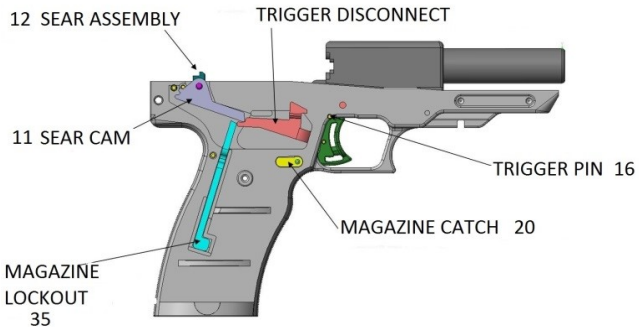
HiPoint45.com